Register your new Bosch now:
www.bosch-home.com/welcome

Dishwasher

SM...
SB...

BOSCH

en Instruction manual

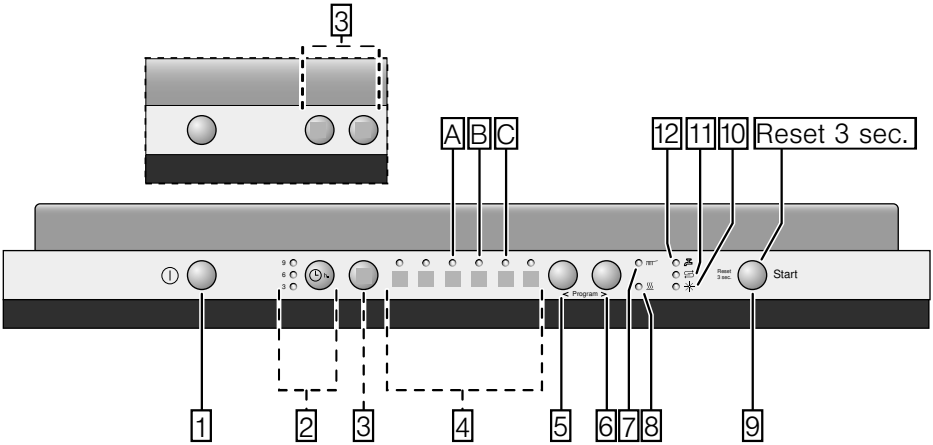
3
A
B
C
12
11
10
Reset 3 sec.
Program
Reset 3 sec.
Start
1
2
3
4
5
6
7
8
9

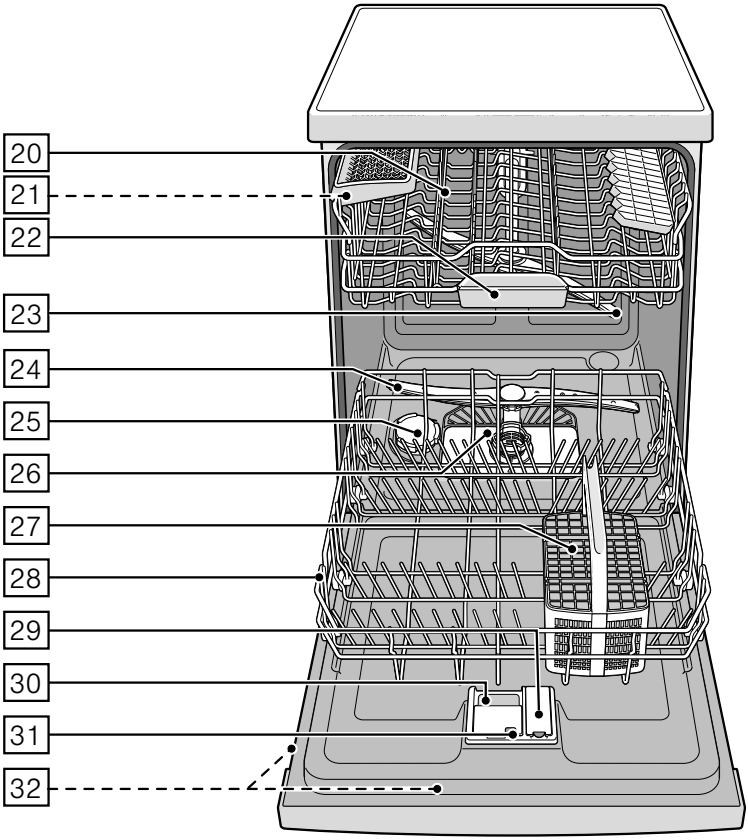
20
21
22
23
24
25
26
27
28
29
30
31
32

Table of contents

Intended use 4

Safety instructions 4

Before you switch ON the appliance 4
Delivery. 5
Installation. 5
In daily use 6
Door lock 6
Damage 6
Disposal 7

Protection of the environment 8

Packaging. 8
Old appliances 8

Getting to know your appliance 9

Control panel 9
Appliance interior 9

Water softening system/ Special salt 9

Setting 10
Water hardness table 10
Using special salt 10
Detergents with salt component 11
Switching off water softening system. 11

Rinse aid 11

Setting amount of rinse aid. 12
Switching off rinse-aid refill indicator 12

Utensils 12

Not suitable 12
Glass and utensil damage 12
Loading the dishwasher 13
Unloading the dishwasher 13
Cups and glasses. 13
Pans 14
Cutlery basket. 14
Etagere 14
Folding spikes 15
Small accessories holder 15
Knife shelf. 15
Adjusting the height of the basket . . 15

Detergent 16

Adding detergent 17
Combination detergent 17

Overview of programmes 19

Programme selection 20
Information for test institutes. 20

Additional options 20

Express Wash/ Speed Perfect (VarioSpeed). 20
Intensive zone. 20
Hygiene. 20
Half load 20
Extra drying. 20

Operating the appliance 21

Programme data. 21
Aqua sensor 21
Switching on the appliance. 21
Optical display while the programme is running 22
Timer programming 22
End of programme 22
Interrupting the programme 23
Terminating the programme 23
Changing the programme. 23
Intensive drying. 23

Cleaning and maintenance . . . 24

Overall condition of the machine . . . 24
Special salt and rinse aid 24
Filters 25
Spray arms 25

Fault, what to do? 26

Waste water pump 26
Fault table. 27

Customer service 34

Installation and connection . . 34

Product package 34
Safety instructions. 34
Delivery. 35
Technical specifications 35
Installation. 35
Waste-water connection 36
Drinking water connection 36
Electrical connection. 37
Removing the appliance. 37
Transportation. 38
Protection against frost
(Emptying the appliance) 38

Intended use

- This appliance is intended for use in the home and the home environment.
- Use the dishwasher only in the household and only for its designed purpose: for washing domestic dishes.

Safety instructions

Children from 8 years of age or people whose physical, sensory or mental abilities or their lack of experience or knowledge prevent them from using the appliance safely must not use this appliance without supervision or instruction by a responsible person.

Before you switch ON the appliance

Please read the operating and installation instructions carefully. They contain important information on how to install, use and maintain the appliance.

Retain all documents for subsequent use or for the next owner.

Delivery

1. Check the packaging and dishwasher immediately for damage caused in transit. Do not switch on a damaged appliance, but contact your supplier.
2. Please dispose of the packaging material in an environmentally friendly manner.
3. Do not let children play with packaging and its parts. There is a risk of suffocation from collapsible boxes and film.

Installation

- Following installation, ensure that the back of the dishwasher is not freely accessible (protection against contact due to hot surface).
- Install and connect the appliance according to the installation and assembly instructions.
- Prior to installation, disconnect the dishwasher from the power supply.
- Ensure that the protective conductor system of the domestic supply has been correctly installed.
- The electrical connection conditions must correspond with the specifications on the dishwasher rating plate [32].
- If the power cord of this appliance is damaged, it must be replaced with a particular power cord.

  To prevent injury, the power cord may be purchased from customer service only.
- If the dishwasher is installed in a high-sided unit, the unit must be secured properly.
- If the dishwasher is installed below or above other domestic appliances, follow the information for installation in combination with a dishwasher in the installation instructions for the particular appliances.
- Also follow the installation instructions for the dishwasher to ensure that all appliances are operated safely.
- If there is no information or if the installation instructions do not include the appropriate information, contact the manufacturer of these appliances to ensure that the dishwasher can be installed above or below these appliances.

- If you cannot obtain any information from the manufacturer, you must not install the dishwasher above or below these appliances.
- If you install a microwave oven above the dishwasher, the microwave oven may be damaged.
- Install built-under or integratable appliances only under continuous worktops which have been screwed to adjacent cupboards to ensure stability.
- Do not install the appliance near heat sources (radiators, heat storage tanks, cookers or other appliances which generate heat) and do not install under a hob.
- After installing the appliance, ensure that the plug is easily accessible.
  (See Electrical connection)
- Some models:
  The plastic housing on the water connection contains an electric valve, the connecting cables are in the supply hose. Do not cut through this hose, do not immerse the plastic housing in water.

In daily use

Read and observe the safety information and instructions for use on the packaging for cleaning and rinsing agents.

Childproof lock (door lock) *

The description of the childproof lock is at the back in the envelope.

* depending on model

Damage

- The appliance may be repaired and opened up by a technician only. To do this, disconnect the appliance from the power supply. Pull out the mains plug or switch off the fuse. Turn off the tap.
- If the appliance is damaged, especially the fascia (cracks, holes, broken buttons), or the door function is impaired, stop operating the appliance. Pull out mains plug or switch off fuse. Turn off tap, call customer service.

Disposal

1. Make redundant appliances unusable to prevent subsequent accidents.
2. Dispose of the appliance in a n environmentally friendly manner.

⚠ Warning
Risk of injury!

- To prevent injuries, e.g. caused by stumbling, open the dishwasher only briefly in order to load and unload the dishwasher.
- Knives and other utensils with sharp points must be placed in the cutlery basket with the points downwards or horizontally on the knife shelf*.
- Do not lean or sit on the open door.
- In the case of free-standing appliances, ensure that the baskets are not overloaded.
- If the appliance is not in a cavity and a side panel is accessible, the door hinge area must be covered at the side for reasons of safety (risk of injury). The covers are available as optional accessories from customer service or specialist outlets.

* depending on model

⚠ Warning
Risk of explosion!

Do not add any solvents to the washing chamber. Danger of explosion!

⚠ Warning
Risk of scalding!

Open the door carefully when the programme is still running. There is a risk of hot water spraying out of the appliance.

⚠ Warning
Risks to children!

- If fitted, use the childproof lock. An exact description can be found in the back of the enve lope.
- Do not allow children to play with or operate the appliance.
- Keep children away from detergents and rinse aid. These may cause chemical burns in the mouth, throat and eyes or asphyxiation.
- Keep children away from open dishwasher. The water in the rinsing compartment is not drinking water and could contain detergent residue.

- Ensure that children do not place fingers in the tablet collecting tray [22]. Small fingers could become caught in the slots.
- When opening and closing the door on an eye-level appliance, ensure that children do not become jammed or crushed between the appliance door and the cupboard door below.
- Children could become locked in the appliance (danger of suffocation) or get into another dangerous situation.
  Redundant appliances: Pull out the mains plug, sever and dispose of the power cord. Destroy the door lock so that the door can no longer be closed.

Protection of the environment

Both the packaging of new appliances and the old appliances themselves contain valuable raw materials and recyclable materials.

Please dispose of the individual parts separated according to type.

Please ask your dealer or inquire at your local authority about current means of disposal.

Packaging

All plastic parts of the appliance are identified with internationally standardised abbreviations (e.g. >PS< polystyrene). Therefore, plastic waste can be sorted out when the appliance is being disposed of.

Please follow the safety instructions under “Delivery”.

Old appliances

Please follow the safety instructions under “Disposal of your appliance”.

This appliance is labelled in accordance with European Directive 2012/19/EU concerning used electrical and electronic appliances (waste electrical and electronic equipment - WEEE). The guideline determines the framework for the return and recycling of used appliances as applicable throughout the EU

Getting to know your appliance

Diagrams of the control panel and the interior of the appliance can be found in the envelope at the front.

Individual positions are referred to in the text.

Control panel

1 ON/OFF switch
2 Timer programming *
3 Additional options **
4 Programme **
5 Button <
6 Button >
7 Cleaning display
8 Dry display
9 START button
10 Rinse aid refill indicator
11 Salt refill indicator
12 Display “Check water supply”
* depending on model
** Number depending on model

Appliance interior

20 Top basket
21 Knife shelf *
22 Tablet collecting tray
23 Top spray arm
24 Bottom spray arm
25 Dispenser for special salt
26 Filters
27 Cutlery basket
28 Bottom basket
29 Dispenser for rinse aid
30 Detergent dispenser
31 Lock for detergent dispenser
32 Rating plate
* depending on model

Water softening system/Special salt

To ensure good washing results, the dishwasher requires soft water, i.e. containing low amounts of lime, otherwise white limescale will be deposited on the utensils and inner container.

Tap water above a specific degree of water hardness must be softened, i.e. descaled, for use in a dishwasher. Water is softened with special salt in the water softening system of the dishwasher.

The setting and therefore the required amount of salt depends on the degree of hardness of your tap water (see table).

Setting

The amount of salt dispensed can be set in 4 stages
depending on the hardness of your water. Accordingly 0, 1, 2 or 3 displays are lit (see table). Factory setting: 1.

1. Find out about the hardness value of your tap water. Your water utility company will help you with this.
2. Setting can be found in the water hardness table.
3. Open the door.
4. Switch on ON/OFF switch [1].
5. Hold down button > [6] and press START button [9] until the dry display [8] and salt refill indicator [11] flash.
6. Release buttons.
   The salt refill indicator [11] flashes and the display [A] is lit (= Setting 1).

To change the setting:

1. Press the button < [5] until the required setting has been selected.
2. Press START button [9].
   The displays [8] and [11] go out. The selected setting is saved.
3. Close the door.

Water hardness table

° Clarke	Hardness range	mmol/l	Setting	A	B	C
0 - 8	soft	0 -1,1	0	○	○	○
9 - 20	medium	1,2-2,9	1	●	○	○
21 - 26	hard	3,0-3,7	2	●	●	○
27 - 44	hard	3,8-6,2	3	●	●	●

Using special salt

Always refill with special salt immediately before switching on the appliance. This ensures that overrun special salt solution is immediately washed out and does not corrode the rinsing tank.

1. Open the screw-type cap of the compartment [25].
2. Fill the tank with water (only required when switching on the appliance for the first time).
3. Then add dishwasher salt **(not table salt or tablets)**.
   The water is displaced and runs out.

As soon as the salt refill indicator 11 on the fascia is lit, top up the salt.

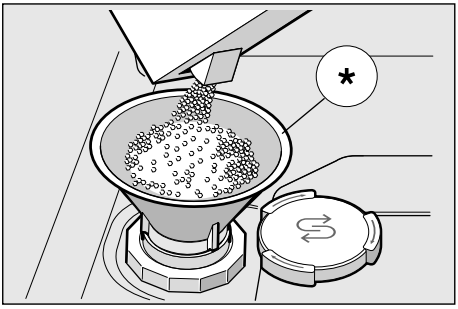

* depending on model

Using detergents with salt component

If combined detergents with a salt component are used, salt can usually be omitted up to a water hardness of 21° dH (37° fH, 26° Clarke, 3.7 mmol/l). If the water hardness is over 21° dH, special salt must be used.

Switching off salt refill indicator/water softening system

If the salt refill indicator 11 is impaired (e.g. when using combined detergents containing salt component), it can be switched off.

- Proceed as described under “Adjusting the water softening system” and select setting 0.

  The water softening system and salt refill indicator are now switched off.

⚠ Caution

Never fill the salt dispenser with detergent. You will destroy the water softening system.

Rinse aid

As soon as the rinse-aid refill indicator 10 is lit on the fascia, there is still a rinse-aid reserve of 1-2 rinsing processes. Refill with rinse aid.

The rinse aid is required for stain-free utensils and clear glasses. Use only rinse aid for domestic dishwashers.

Combined detergents with rinse-aid component may be used up to a water hardness of 21° dH (37° fH, 26° Clarke, 3.7 mmol/l) only. If the water hardness is over 21° dH, rinse aid must be used.

1. Open the dispenser 29 by pressing and lifting the plate on the cover.

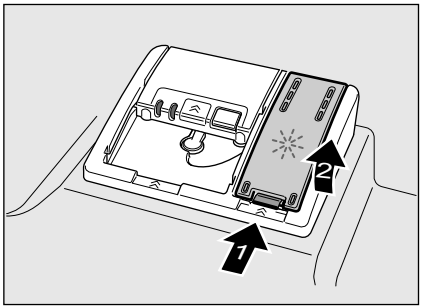

2. Carefully pour rinse aid up to the max. mark in the filler opening.

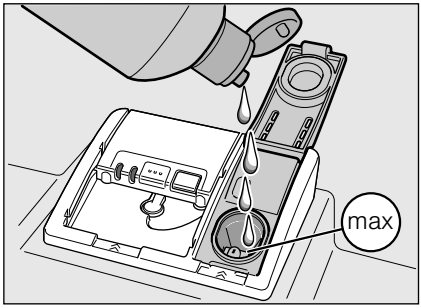

3. Close cover until it clicks shut.
4. To prevent excessive foam formation during the next rinse cycle, remove any rinse aid which has run over with a cloth.

Setting amount of rinse aid

The amount of rinse aid dispensed can be set in 4 stages. Accordingly 0, 1, 2 or 3 displays are lit (see water hardness table).

Factory setting: 2.

Do not change the amount of rinse aid unless streaks (select lower setting) or water stains (select higher setting) are left on the utensils.

1. Open the door.
2. Switch on ON/OFF switch [1].
3. Hold down button > [6] and press START button [9] until the dry display [8] and salt refill indicator [11] flash.
4. Release buttons.
5. Keep pressing button > [6] until the rinse aid refill indicator [10] flashes.

   The rinse aid refill indicator [10] flashes and the displays [A] and [B] are lit (= Setting 2).

To change the setting:

1. Press the button < [5] until the required setting has been selected.
2. Press START button [9].

   The displays [8] and [10] go out. The selected setting is saved.
3. Close the door.

Switching off rinse-aid refill indicator

If the rinse-aid refill indicator [10] is impaired (e.g. when using combined detergents containing rinse-aid component), it can be switched off.

- Proceed as described under “Setting amount of rinse aid” and select setting 0.

The rinse aid refill indicator [10] is now switched off.

Utensils

Not suitable

- Cutlery and utensils made of wood.
- Delicate decorative glasses, craft and antique utensils. These decors are not dishwasher-proof.
- Plastic parts not resistant to heat.
- Copper and tin utensils.
- Utensils which are soiled with ash, wax, lubricating grease or ink.

Aluminium and silver parts have a tendency to discolour and fade during the wash cycle. Even some types of glass (e.g. crystal glass objects) may turn cloudy after many wash cycles.

Glass and utensil damage

Causes:

- Glass type and glass production process.
- Chemical composition of the detergent.
- Water temperature of the wash programme.

Recommendation:

- Use only glasses and porcelain which the manufacturer designates as dishwasher-proof.
- Use a detergent which protects utensils.
- Take glass and cutlery out of the dishwasher as soon as possible after the programme ends.

Loading the dishwasher

1. Remove large food remnants. It is not necessary to prerinse utensils under running water.
2. Place the utensils so that
   - they are secure and cannot tip over.
   - all utensils with their openings face down.
   - parts with curves or indentations are at an angle, thereby allowing water to drain.
   - does not obstruct rotation of the two spray arms [23] and [24].

Very small utensils should not be washed in the machine, as they may fall out of the baskets.

Unloading the dishwasher

To prevent water from dripping off the upper basket onto the utensils in the lower basket, it is recommended to empty the appliance from the bottom up.

Hot utensils are sensitive to shock! Therefore, when the programme ends, leave the utensils to cool down in the dishwasher until they can be handled.

Note

When the programme ends, water droplets can still be seen inside the appliance. This does not affect the drying of the utensils.

Cups and glasses

Top basket [20]

Note

Utensils must not be placed above the tablet collecting tray [22]. These may block the lid of the detergent dispenser and prevent it from opening fully.

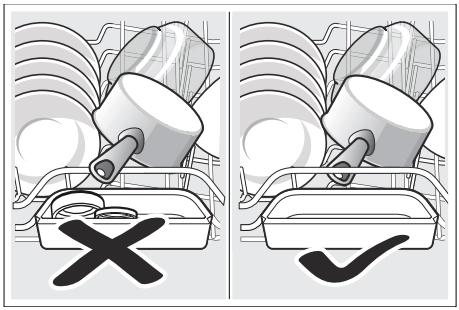

Pans

Bottom basket 28

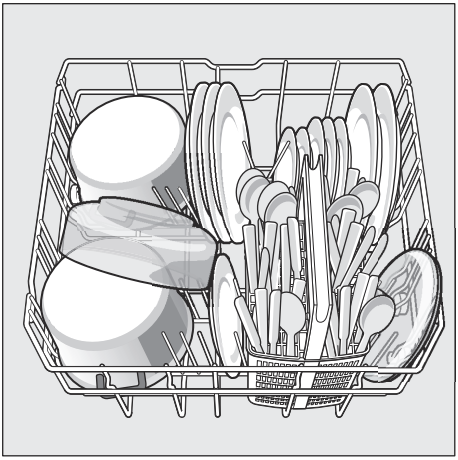

Tip

Heavily soiled utensils (pans) should be placed in the bottom basket. The more powerful spray jet provides a better dishwashing result.

Tip

Other examples, such as the best way of loading your dishwasher, can be found on our homepage as a free download. The corresponding Internet address can be found on the back page of these instructions for use.

Cutlery basket

You should always place cutlery unsorted with the points downwards.

To prevent injuries, place long, pointed implements and knives on the knife shelf.

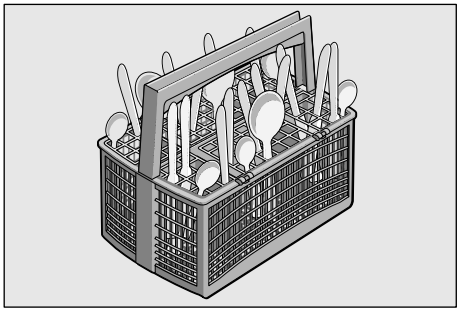

Etagere *

The etagere and the space underneath can be used for small cups and glasses or for larger items of cutlery, such as wooden spoons or serving cutlery. The etagere can be folded up if not required.

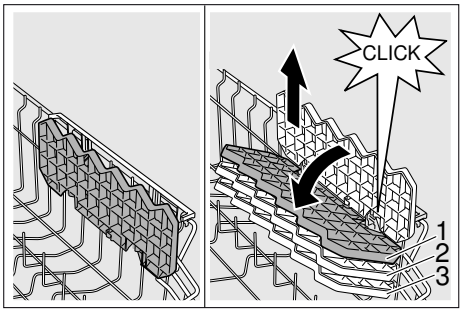

* Depending on the model, a 3-fold height adjustment is possible. To do this, first place the etagere vertically and pull up, then place at a slight angle, push down to the required height (1, 2, or 3) and snap into place.

Folding spikes *

* depending on model

The spikes can be folded down to improve arrangement of pans, bowls and glasses.

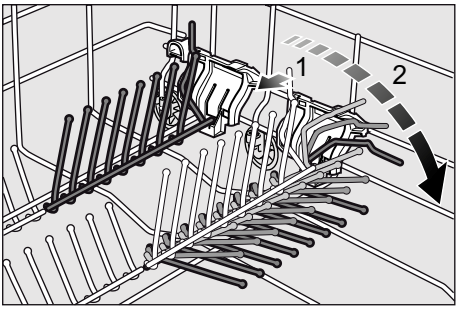

Small accessories holder *

* depending on model

Light-weight plastic accessories, e.g. cups, lids, etc. can be held securely in the small accessories holder.

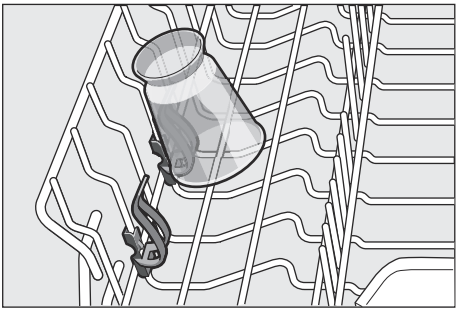

Knife shelf *

* depending on model

Long knives and other utensils can be arranged horizontally.

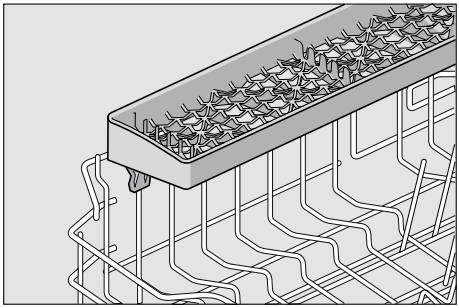

Adjusting the height of the basket *

* depending on model

If required, the height of the upper utensils basket [20] can be adjusted to provide more space for tall utensils either in the upper or lower basket.

Appliance height 81.5 cm

	Top basket	Bottom basket
Setting 1 max. ø	22 cm	30 cm
Setting 2 max. ø	24.5 cm	27.5 cm
Setting 3 max. ø	27 cm	25 cm

Appliance height 86.5 cm

	Top basket	Bottom basket
Setting 1 max. ø	24 cm	33 cm
Setting 2 max. ø	26.5 cm	30.5 cm
Setting 3 max. ø	29 cm	28 cm

Select one of the two following procedures according to the design of the top basket for your appliance model:

Top basket with side levers

1. Pull out the top basket 20 out.
2. To **lower** the basket, press in the left and then the right lever on the outside of the basket. In doing so, hold the sides of the basket along the upper edge to prevent it from suddenly dropping.

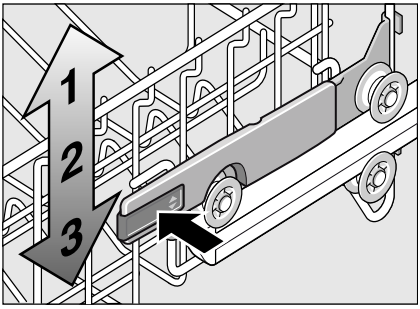

3. To **raise** the basket, hold the basket on the sides of the upper edge and lift it up.
4. Before re-inserting the basket again, ensure that it is at the **same height** on both sides. Otherwise, the appliance door cannot be closed and the upper spray arm will not be connected to the water circuit.

Top basket with upper and lower roller pairs

1. Pull out the top basket 20 out.
2. Remove the upper basket and re-attach it to the upper (stage 3) or lower (stage 1) rollers.

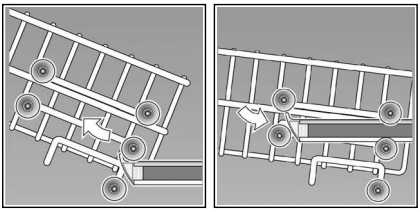

Detergent

You can use tablets as well as powder or liquid detergents for dishwashers, but never use washing up liquid.
The dosage can be individually adjusted with powder or a liquid detergent according to the degree of soiling.
Tablets contain an adequately large amount of active ingredients for all cleaning tasks. Modern, powerful detergents predominantly use a low-alkaline formulation with phosphate and enzymes. Phosphates bond the lime in the water. Enzymes break down starch and remove protein.
Phosphate-free detergents are less frequent. These have a slightly weaker lime bonding capacity and require a higher dosage. To remove coloured stains (e.g. tea, tomato sauce), oxygen-based bleaching agents are usually used.

Note

To ensure a good washing result, always follow the instructions on the detergent packaging!
If you have further questions, we recommend that you contact the detergent manufacturers' helpline.

⚠ **Warning –** Read and observe the safety information and instructions for use on the packaging for cleaning and rinsing agents.

Adding detergent

1. If the detergent dispenser [30] is still closed, press the lock [31] to open the detergent dispenser.

   Pour detergent into the dry detergent dispenser [30] only (insert tablet flat, not on its edge).
   Dosage: see manufacturer's instructions on the packaging.
   The graduated detergent dispenser [30] helps you add the correct amount of powder or liquid detergent.
   Usually 20 ml–25 ml are adequate for normal soiling. If using tablets, one tablet is adequate.

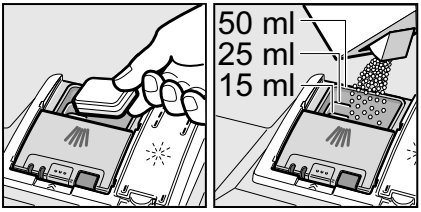

2. Close the cover on the detergent dispenser by sliding it up until the lock engages without difficulty.

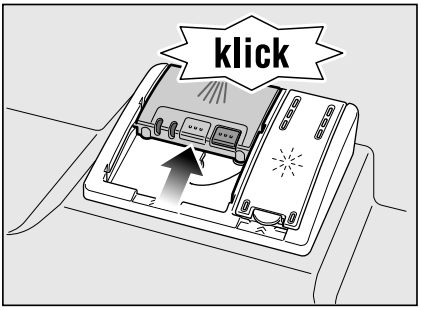

   The detergent dispenser opens automatically at the optimum time depending on the programme.
   The powder or liquid detergent is distributed in the appliance and is dissolved, the tablet falls into the tablet collecting tray where it dissolves in doses.

Tip

If the utensils are only lightly soiled, slightly less than the indicated amount of detergent is usually adequate.

Suitable detergents and care products can be purchased online
via our website or via customer service (see back page).

Combination detergent

Apart from conventional detergents (Solo), a number of products are offered with additional functions. These products contain not only the detergent but also rinse-aid and salt replacement substances (3in1) and, depending on the combination (4in1, 5in1, etc.), additional components such as glass protection or stainless steel cleaner. Combination detergents function only up to a specific degree of hardness (usually 21°dH). Over this limit salt and rinse-aid must be added.

As soon as combined detergents are used, the rinse programme is adjusted automatically to ensure the best possible rinsing and drying result.

⚠ **Warning –** Do **not** place small parts for washing in the tablet collecting tray [22]; this prevents the tablet from dissolving evenly.

⚠ **Warning –** If you want to add more utensils after the programme has started, do **not** use the tablet collecting tray [22] as a handle for the upper basket. The tablet could already be there and you will touch the partially dissolved tablet.

Notes

- You will obtain optimum rinsing and drying results by using solo detergents and applying salt and rinse aid separately.
- If programmes are short, tablets may not have full cleaning effect due to different dissolving properties and there may even be undissolved detergent residue. It is recommended to use washing powder for these programmes.
- The Intensive programme (on some models) requires one tab only. When using washing powder, you can apply some of this cleaning agent to the inside of the appliance's door.
- Even if the rinse-aid and/or salt refill indicator is lit, the rinse programme will run correctly with combined detergents.
- If using detergents in a water-soluble protective cover: Take hold of the cover with dry hands only and put the detergent into an absolutely dry detergent dispenser only, otherwise the detergent may stick.
- If you switch from combined detergents to solo detergents, ensure that the water softening system and amount of rinse aid have been set to the correct value.

Overview of programmes

The max. possible number of programmes is illustrated in this overview. The corresponding programmes and their arrangement can be found on the fascia.

Type of utensils	Type of soiling	Programme	Possible additional options	Programme sequence
pots and pans, non-sensitive utensils and cutlery	very adhesive burned-in or dried-on food remnants containing starch or protein	/ Intensive 70°	all	Prerinse Clean 70° Intermediate rinse Final rinse 65° Drying
		/ Normal 65°	all	Prerinse Clean 65° Intermediate rinse Final rinse 65° Drying
mixed utensils and cutlery	part dried, common household food remnants	/ Normal 65°	all	Prerinse Clean 65° Intermediate rinse Final rinse 65° Drying
		/ eco Eco 50°	all	Prerinse Clean 50° Intermediate rinse Final rinse 65° Drying
sensitive utensils, cutlery, temperature-sensitive plastic and glasses	slightly adhesive, fresh food remnants	/ Gentle 40°	IntensivZone Express Wash/ Speed Perfect (VarioSpeed) Half load Extra drying	Prerinse Clean 40° Intermediate rinse Final rinse 55° Drying
		/ Quick 45°	Extra drying	Clean 45° Intermediate rinse Final rinse 55°
all types of utensils	cold rinsing, intermediate cleaning	/ Prerinse	none	Prerinse

Programme selection

You can select a suitable programme according to the type of utensils and degree of soiling.

Information for test institutes

Test institutes receive the information for comparability tests (e.g. according to EN60436).

These are the conditions for conducting the tests, however these are not the results or consumption values.

Request by e-mail to:

dishwasher@test-appliances.com

The product number (E no.) and the production number (FD) are required which you can find on the rating plate [32] on the appliance door.

P+ Additional options

* depending on model

Additional options can be set with the buttons [3].

Express Wash/ Speed Perfect/ (VarioSpeed) *

This function can reduce the running time by approx. 20% to 50% depending on the selected rinse programme. To obtain optimum cleaning and drying results at a reduced running time, water and energy consumption are increased.

Intensive zone *

Perfect for a mixed load. You can wash very soiled pots and pans in the lower basket together with normally soiled utensils in the upper basket. The spray pressure in the lower basket is intensified, the rinsing temperature is increased slightly.

Hygiene *

The temperature is increased during the cleaning process. This increases the hygiene status. This additional option is ideal for cleaning e.g. chopping boards and baby bottles.

Half load *

If you have only a few items to wash (e.g. glasses, cups, plates), you can switch to “half load”. This will save water, energy and time. It is recommended to put a little less detergent in the detergent dispenser than for a full load.

Extra drying *

An increased temperature during the final rinse and an extended drying phase ensure that even plastic parts dry better. There is a slight increase in the energy consumption.

Operating the appliance

Programme data

The programme data (consumption values) can be found in the summary of instructions. This data refers to normal conditions and the water hardness set value 2. Different influencing factors such as water temperature or mains pressure may result in deviations.

Aqua sensor *

* depending on model

The Aqua sensor is an optical measuring device (light barrier) which measures the turbidity of the rinsing water.

The Aqua sensor is used according to the programme. If the Aqua sensor is active, “clean” rinsing water can be transferred to the next rinse bath and water consumption can be reduced by 3–6 litres. If the turbidity is greater, the water is drained and is replaced with fresh water. In the automatic programmes the temperature and running time can also be adjusted to the degree of soiling.

Switching on the appliance

1. Turn on the tap fully.
2. Open the door.
3. Switch on ON/OFF switch [1].
   The Eco 50° programme display flashes. This programme remains selected unless another programme is selected with the button < [5] or button > [6].
4. Press the START button [9].
5. Close the door.
   The programme starts running.

Note

- for environmentally friendly operation of the dishwasher:
For ecological reasons the Eco 50° programme is preset whenever the appliance starts. This conserves environmental resources and not least saves you money.
The Eco 50° programme is a particularly environmentally friendly programme. According to EU regulation 1016/2010 it is the “Standard programme” which is the most efficient standard cleaning cycle for cleaning normally soiled utensils in terms of the combined energy and water consumption for cleaning these types of utensils.

Optical display while the programme is running *

* depending on model

While the programme is running, a light spot shines on the floor under the appliance door. Do not open the dishwasher door until the light point is no longer visible on the floor.

If the appliance is installed at eye-level, with flush furniture front, the light point is not visible.

Timer programming *

* depending on model

You can delay the start of the programme by 3, 6 or 9 hours.

1. Switch on ON/OFF switch [1].
2. Keep pressing the Preselected starting time button [2] until the appropriate display 3h, 6h or 9h is lit.
3. Press START button [9], timer programming is activated.
4. To delete the preselected starting time, keep pressing the Preselected starting time button [2] until none of the displays 3h, 6h or 9h is lit.

   You can change your programme selection at any time until the programme starts.

End of programme

The programme has ended when neither of the two displays [8] or [7] is lit.

The end of the programme is also indicated by an acoustic signal.
The buzzer volume can be set in 4 stages. Accordingly 0, 1, 2 or 3 displays are lit (see water hardness table).
Factory setting: 2. This function can be changed as follows:

1. Open the door.
2. Switch on ON/OFF switch [1].
3. Hold down button > [6] and press START button [9] until the dry display [8] and salt refill indicator [11] flash.
4. Release buttons.
5. Keep pressing button > [6] until the salt refill indicator [11] **and** rinse aid refill indicator [10] flash.
6. Release buttons.

   The refill indicators [11] and [10] flash and the displays [A] and [B] are lit (= Setting 2). The set buzzer volume can be heard.

To change the setting:

1. Press the button < [5] until the required setting has been selected.
2. Press START button [9].

   The displays go out. The selected setting is saved.
3. Close the door.

Note

To save energy, the dishwasher automatically switches off after the end of the programme.

Interrupting the programme

1. Open the door.
2. Switch off ON/OFF switch [1].
   The LEDs go out. The programme is saved.
   If the door was opened on an appliance which has a warm water connection or is heated, first leave the door ajar for several minutes and then close. Otherwise, expansion (pressure) may cause the appliance door to spring open or water to run out of the appliance.
3. To continue the programme, switch on the ON/OFF switch [1] again.
4. Close the door.

Terminating the programme (Reset)

1. Open the door.
2. Press START button [9] for approx. 3 sec. until all displays go out.
3. Close the door.
   The remaining programme sequence for draining the residual water takes approx. 1 minute.

Changing the programme

When the START button [9] has been pressed, the programme cannot be changed.

The only way a programme can be changed is by Cancel programme (Reset).

Intensive drying

The final rinse uses a higher temperature which improves the drying result. The running time may increase slightly. (Caution if utensils are delicate!)

1. Open the door.
2. Switch on ON/OFF switch [1].
3. Hold down button > [6] and press START button [9] until the dry display [8] and salt refill indicator [11] flash.
4. Release buttons.
5. Keep pressing button > [6] until the salt refill indicator [11] **and** “Check water supply” [12] flash.
6. Release buttons.
   The displays [11] and [12] flash.

To change the setting:

1. Press button < [5] until the display [A] is lit (Intensive drying on).
2. Press START button [9].
   The displays go out. The setting is saved.
3. Close the door.

Cleaning and maintenance

A regular inspection and maintenance of your machine will help to prevent faults. This saves time and prevents problems.

Overall condition of the machine

- Check spray arm for grease and limescale deposits.

If you find such deposits:

- Fill detergent dispenser with detergent. Start the appliance without utensils in the programme with the highest rinsing temperature.

Clean the appliance with detergents/ appliance cleaners which are particularly suitable for use with dishwashers.

- To ensure that the door seal always remains clean and hygienic, regularly clean it with a damp cloth and a little washing-up liquid.
- If the appliance is switched off for a prolonged period, leave the door ajar to prevent the formation of an unpleasant odour.

Never use a steam cleaner to clean your dishwasher. The manufacturer is not liable for any consequential damage.

Regularly wipe the front of the appliance and fascia with a damp cloth; water and a little washing up liquid are adequate. Do not use sponges with a rough surface or abrasive detergents, as these could scratch the surfaces.

Stainless steel appliances: To prevent corrosion, avoid using sponge cloths or wash them out thoroughly several times before using for the first time.

⚠ Warning – Health hazard

Never use other domestic detergents, e.g. containing chlorine!

Special salt and rinse aid

- Check the refill indicators [11] and [10]. If required, refill salt and/or rinse aid.

Filters

The filters [26] keep large foreign objects in the rinsing water away from the pump. These foreign objects may occasionally block the filters.

The filter system consists of a coarse filter, a flat fine filter and a microfilter.

1. After each washing cycle check the filters for residue.
2. Unscrew filter cylinder as illustrated and take out filter system.

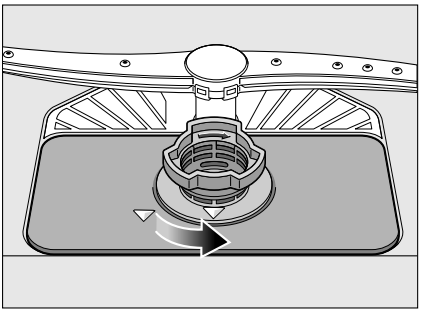

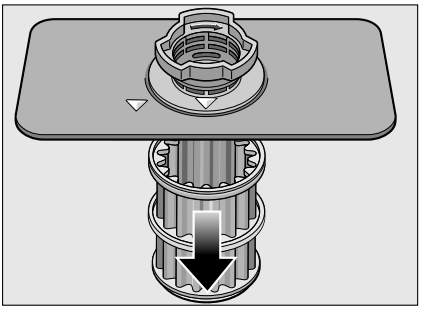

3. Remove any residue and clean filters under running water.
4. Re-install filter system in reverse sequence and ensure that the arrow marks are opposite each other after closing the filter system.

Spray arms

Limescale and contaminants in the rinsing water may block nozzles and bearings on the spray arms [23] and [24].

1. Check outlet nozzles on the spray arms for blockages.
2. Unscrew the upper spray arm [23].
3. Remove the lower spray arm [24] upwards.

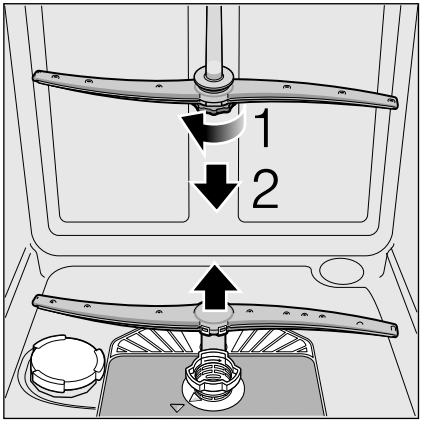

4. Clean spray arms under running water.
5. Re-engage or screw on spray arms.

Fault, what to do?

Experience has shown that you can rectify most faults which occur in daily operation yourself. This ensures that the machine is quickly available to you again. In the following overview you can find possible causes of malfunctions and helpful information for rectifying them.

Note

If the appliance stops during dishwashing or does not start for no obvious reason, first run the Abort programme function (Reset).
(See chapter entitled “Operating the appliance”)

⚠ **Warning –** Don’t forget: Repairs may be carried out by technicians only. If a component has to be replaced, ensure that only original spare parts are used. Improper repairs or use of non-original spare parts may cause considerable damage and put the user at considerable risk.

Waste water pump

Large food remnants or foreign objects which were not captured by the filters may block the waste water pump. The rinsing water will then be above the filter.

⚠ **Warning – Risk of cuts!**

When cleaning the waste water pump, ensure that you do not injure yourself on pieces of broken glass or pointed implements.

In this case:

1. First always disconnect the appliance from the power supply.
2. Take out top basket [20] and bottom basket [28].
3. Remove the filters [26].
4. Scoop out water, use a sponge if required.
5. Prise out the white pump cover (as illustrated) using a spoon. Grip the cover on the crosspiece and lift diagonally inwards. Remove cover completely.

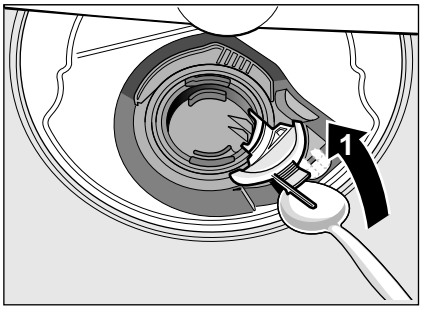

6. Check impeller wheel and remove any foreign objects.
7. Place cover in the original position and press down until it engages (click).

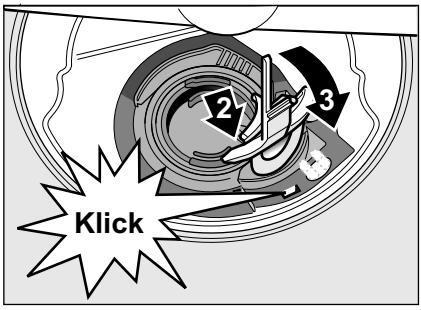

8. Install filters.
9. Re-insert baskets.

Fault table

Fault	Cause	Remedial action
"Check water supply" display 12 lights up.	Supply hose kinked.	Install supply hose without kinks.
	Tap turned off.	Turn the tap on.
	Tap jammed or calcified.	Turn the tap on. Flow rate must be min. 10 l/min. when water supply is open.
	Filter in the water supply blocked.	Switch off the appliance and pull out the mains plug. Turn off the tap. Unscrew water connection. 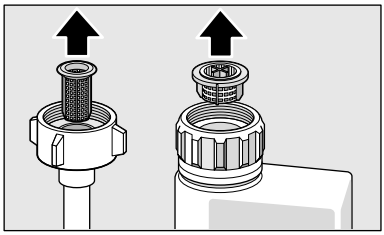 Clean filter in the supply hose. Screw water connection on again. Check for leaks. Reconnect power supply. Switch on the appliance.
	Filters 26 are soiled or blocked.	Clean filters. (see "Cleaning and maintenance").
	Waste-water hose kinked or blocked.	Install hose without kinks, remove any residue.
	Siphon connection still sealed.	Check connection to siphon and open if required.
	Waste water pump blocked or cover on the waste water pump is not locked in position.	Lock cover correctly. (See "Waste water pump")
Display "Check water supply" 12 flashes.	A technical fault has probably occurred.	Switch off appliances with the ON/OFF switch 1. After a short time restart the appliance. If the problem recurs, turn off the tap, pull out the mains plug and call customer service.
Refill indicator for salt 11 flashes.	Heating element calcified or soiled.	Clean appliance with dishwasher cleaning agent or descaler. Operate the dishwasher with water softening system and check the setting (see chapter "Water softening system/Special salt").

Fault	Cause	Remedial action
Displays flash.	Door not closed properly.	Close the door. Ensure that no objects (utensil, fragrance dispenser) are protruding over the basket and preventing the door from closing.
Refill indicator for salt 11 and/or rinse-aid 10 is lit.	No rinse aid.	Refill rinse aid.
	No salt.	Refill with special salt.
	Sensor does not detect salt tablets.	Use different special salt.
Refill indicator for salt 11 and/or rinse-aid 10 is not lit.	Refill indicator switched off.	Activation/deactivation (see chapter Water softening system/Special salt or Rinse aid).
	There is still enough special salt/ rinse aid available.	Check refill indicator, levels.
Water is left in the appliance at the end of the programme.	Filter system or area under the filters 26 is blocked.	Clean filters and area underneath (see “Waste water pump”).
	Program has not ended yet.	Wait until programme ends or reset (see “Terminating the programme”).
Utensils not dry.	No or too little rinse aid in the dispenser.	Refill rinse aid.
	Programme selected without drying.	Select programme with drying (see “Overview of programmes”, “Programme sequence”).
	Water collecting in depressions on the utensils and cutlery.	Arrange utensils in a sloping position, arrange affected utensils as sloping as possible. 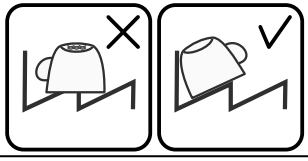
	The combined detergent used has a poor drying performance	Use different combination detergent with better drying performance. Use of rinse aid also increases the drying performance.
	Intensive drying to increase drying not activated.	Activate intensive drying (see “Operating the appliance”)
	Utensils were removed too early or drying process had not ended yet.	Wait until program ends or wait until 30 min after program ends before removing utensils.
	The eco rinse aid used has a poor drying performance.	Use a proprietary rinse aid. Eco products are much less effective.
Plastic utensils not dry.	Special properties of plastic.	Plastic has a lower heat storage capacity and therefore dries less well.

Fault	Cause	Remedial action
Cutlery not dry.	Cutlery not arranged properly in the cutlery basket.	Separate cutlery if possible, prevent contact points.
	Cutlery not arranged properly in the cutlery drawer.	Arrange cutlery properly and separate if possible.
Appliance interior wet after rinse cycle.	No appliance fault	On account of the “Condensation drying” principle, water droplets are physically induced and required in the container. The humidity in the air condenses on the inner walls of the dishwasher, drains and is pumped out.
Food remnants on the utensils.	Utensils placed too closely together, utensils basket overfilled.	Arrange utensils with adequate clearance between them ensuring that the spray jets can reach the surface of the utensils. Prevent contact points.
	Spray arm rotation obstructed.	Arrange utensils so that the spray arm can rotate without obstruction.
	Spray arm nozzles are blocked.	Clean the spray arm nozzles. (see “Cleaning and maintenance”).
	Filters 26 dirty.	Clean filters (see “Cleaning and maintenance”).
	Filters 26 inserted incorrectly and/or not engaged.	Insert and engage filters correctly.
	Rinse programme too weak.	Select a more intensive rinse programme.
	Utensils precleaned too intensely; sensors therefore decide on weak programme sequence. Stubborn soiling cannot be completely removed.	Do not prerinse utensils. Remove only large food remnants. Recommended programme Eco 50° or Intensive.
	Tall narrow receptacles in corner areas are not rinsed adequately.	Do not place hollow receptacles too obliquely and do not place in the corner area.
	Top basket 20 on right and left not set to same height.	Set top basket to same height using side levers.

Fault	Cause	Remedial action
Detergent residue.	Detergent dispenser cover blocked by utensils and therefore does not open fully.	Detergent dispenser cover must not be obstructed by utensils. Do not place utensils or fragrance dispenser in the tablet collecting tray.
	Detergent dispenser cover blocked by the tablet.	Tablet must be inserted flat and not upright.
	Tablets used in the quick or short programme. Dissolving time of the detergent is not reached in the selected short programme.	Dissolving time of tablets too long for a quick or short programme. Use a detergent powder or select a more intensive programme.
	Washing effect and dissolving performance are reduced after a prolonged storage time or detergent is very lumpy.	Change detergent.
Water stains on plastic parts.	Droplet formation on plastic surface is physically unavoidable. After drying, water stains are visible.	Use a more intensive programme (more water changes). Arrange utensils in a sloping position. Use rinse aid. If required, increase softening setting.
Washable or water-soluble coatings in the container or on the door.	Detergent substances are deposited. These coatings cannot usually be removed with chemicals (appliance cleaner, ...).	Change detergent brand. Clean appliance mechanically.
	If there is a “white coating” on the container floor, the water softening system has been set marginally.	Increase softening setting and change detergent if required.
	Salt dispenser cover 25 not closed.	Close salt dispenser cover correctly.
	Only for glasses: Initial glass corrosion – can only apparently be wiped off.	See “Glass and utensil damage”.

Fault	Cause	Remedial action
White, stubborn coatings; limescale on the utensils, container or door.	Detergent substances are deposited. These coatings cannot usually be removed with chemicals (appliance cleaner, ...).	Change detergent brand. Clean appliance mechanically.
	Hardness range incorrectly set or water hardness greater than 8.9 mmol/l.	Set water softening system according to instructions for use or top up salt.
	3 in 1 detergent or bio/eco detergent not effective enough.	Set water softening system according to instructions for use or use separate detergents (proprietary detergent, salt, rinse aid).
	Underdosing of detergent.	Increase detergent dosage or change detergent.
	Too weak rinse programme selected.	Select a more intensive rinse programme.
Tea or lipstick residue on the utensils.	Too low rinsing temperature.	Select programme with higher washing temperature.
	Too little or unsuitable detergent.	Use suitable detergent at correct dosage.
	Utensils precleaned too intensely; sensors therefore decide on weak programme sequence. Stubborn soiling cannot be completely removed.	Do not prerinse utensils. Remove only large food remnants. Recommended programme Eco 50°
Coloured (blue, yellow, brown), difficult to remove to non-removable coatings in the appliance or on stainless steel utensils.	Film formation consisting of ingredients from vegetables (e.g. cabbage, celery, potatoes, noodles, ...) or the tap water (e.g. manganese).	Can be partly removed with machine cleaner or by mechanical cleaning. Coatings are harmless.
	Film formation caused by metallic components on silver or aluminium utensils.	Can be partly removed with machine cleaner or by mechanical cleaning.
Coloured (yellow, orange, brown), easily removable deposits inside the appliance (mainly in the floor area)	Film formation consisting of ingredients from food remnants and substances from the tap water (limescale), “soapy”	Check function of the water softening system (refill with salt) or, if using combined detergents (tablets), activate water softening system (see chapter “Water softening system/Special salt”)
Plastic parts discoloured.	Too low rinsing temperature.	Select programme with higher washing temperature.
	Utensils precleaned too intensely; sensors therefore decide on weak programme sequence. Stubborn soiling cannot be completely removed.	Do not prerinse utensils. Remove only large food remnants. Recommended programme Eco 50°

Fault	Cause	Remedial action
Removable streaks on glasses, glasses with metallic appearance and cutlery.	Too much rinse aid.	Set rinse aid amount to lower setting.
	No rinse aid added or setting too low.	Add rinse aid and check dosage (recommended setting 4–5).
	Detergent residue in the final rinse programme section. Detergent dispenser cover blocked by utensils (cover does not open fully).	Detergent dispenser cover must not be obstructed by utensils. Do not place utensils or fragrance dispenser in the tablet collecting tray.
	Utensils precleaned too intensely; sensors therefore decide on weak programme sequence. Stubborn soiling cannot be completely removed.	Do not prerinse utensils. Remove only large food remnants. Recommended programme Eco 50°
Initial or existing, irreversible clouding of glass.	Glasses not dishwasher-proof, only suitable for dishwasher.	Use dishwasher-proof glasses. Avoid long steam phase (standing time after wash cycle ends). Use wash cycle at lower temperature. Set water softening system according to the water hardness (if required one setting lower). Use detergent with glass protection component.
Rust spots on the cutlery.	Cutlery not adequately rust-resistant. Knife blades are frequently more severely affected.	Use corrosion-resistant cutlery.
	Cutlery will also rust if rusting parts are rinsed at the same time (pan handles, damaged utensil baskets, etc.).	Do not wash rusting parts.
	Salt content in the rinsing water too high, as salt dispenser lock not fastened firmly or salt was spilled while being refilled.	Fasten salt dispenser lock firmly or remove spilled salt.
Appliance does not start.	The mains fuse has tripped.	Check mains fuse.
	Power cord not inserted.	Ensure that the power cord is plugged all the way into the back of the appliance and into the socket. Check that the socket functions.
	The appliance door has not been shut properly.	Close the door.
Programme starts automatically.	You did not wait until programme ended.	Perform reset. (See “Terminating the programme”).

Fault	Cause	Remedial action
The door is difficult to open.	Child lock is activated.	Deactivate child lock. (See instructions for use at the back)
Door cannot be closed.	Door lock has been activated.	Close door with increased force.
	Door cannot be closed due to installation.	Check appliance installation: Door or attached parts must close without obstruction.
Cover on the detergent dispenser cannot be closed.	Detergent dispenser or cover guide blocked by sticky detergent residue.	Remove detergent residue.
Detergent residue in the detergent dispenser or in the tablet collecting tray.	Spray arms blocked by utensils, therefore detergent is not rinsed out.	Ensure that the spray arms can rotate freely.
	The detergent dispenser was damp when filled.	Pour detergent into the dry detergent dispenser only.
Appliance stops in the programme or programme is interrupted.	Door not closed properly.	Close the door.
	Do not place utensils or fragrance dispenser in the tablet collecting tray. Top basket presses against the door and prevents door from being closed securely.	Check whether rear panel is being pressed in, e.g. by socket or by hose holder which has not been removed.
	Power and/or water supply interrupted.	Restore power and/or water supply.
Filling valves making striking noises.	Depends on domestic installation, as appliance is not defective. No effect on appliance function.	No remedial action possible.
Knocking or rattling noise.	Spray arm strikes the utensils, utensils not positioned correctly.	Position utensils so that the spray arms do not strike the utensils.
	If there is a low load, the water jets strike the washing tank directly.	Load the appliance with more utensils or distribute the utensils more evenly in the dishwasher.
	Light utensils move during the wash cycle.	Arrange light utensils securely.
Unusual foam formation.	Handwash liquid in the rinse aid dispenser.	Immediately refill rinse aid dispenser with rinse aid.
	Rinse aid spilled.	Remove rinse aid with a cloth.

Customer service

If you are unable to rectify the fault, please contact your customer service. We always find a suitable solution, even to avoid unnecessary visits by technicians. Contact information for your nearest customer service can be found on the back of these instructions for use or on the enclosed customer service list. When calling, please state the appliance number (E-Nr. = 1) and the production number (FD = 2) which can be found on the rating plate 32 on the appliance door.

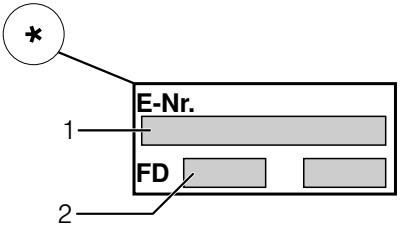

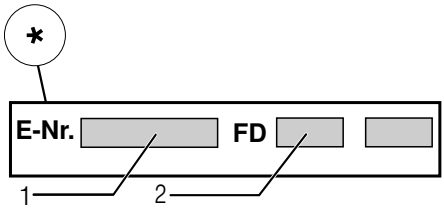

Rely on the competence of the manufacturer. Contact us. You can therefore be sure that the repair is carried out by trained service technicians who carry original spare parts for your domestic appliances.

* depending on model

Installation and connection

The dishwasher must be connected correctly, otherwise it will not function properly. The specifications for the inlet and outlet as well as the electrical connected loads must correspond with the required criteria as specified in the following paragraphs or in the installation instructions.

Install the appliance in the correct sequence:

1. Checking appliance on delivery
2. Installing the appliance
3. Waste water connection
4. Drinking water connection
5. Electrical connection

Product package

If you have any complaints, contact the dealer where you purchased the appliance or our customer service.

- Dishwasher
- Instructions for use
- Installation instructions
- Warranty*
- Installation materials
- Steam guard plate*
- Rubber apron*
- Power cord

* depending on model

Safety instructions

Please follow the safety instructions under “Installation”.

Delivery

Your dishwasher has been checked thoroughly in the factory to ensure that it is in working order. This may cause small water stains. These will disappear after the first wash cycle.

Technical specifications

Weight:

max. 60 kg

Voltage:

220–240 V, 50 Hz or 60 Hz

Connected load:

2.0–2.4 kW

Fuse:

10/16 A (UK 13A)

Power input:

switched off 0.10 W

not switched off 0.10 W

Water pressure:

at least 0.05 MPa (0.5 bar), maximum 1 MPa (10 bar). At a higher water pressure: connect pressure-reducing valve ahead.

Inlet rate:

minimum 10 litres/minute

Water temperature:

Preferably cold water; if hot water, depending on type of water inlet hose, max. temp. 60 °C (see Drinking water connection).

Capacity:

12–15 place settings (depending on model).

Installation

The required installation dimensions can be found in the installation instructions. Level the appliance with the aid of the height-adjustable feet. Ensure that the appliance is situated securely on the floor.

- A built-under or integrated appliance which is installed subsequently as a free-standing appliance must be secured to prevent it from overturning, e.g. by screwing it to the wall or by installing it under a continuous worktop which is screwed to adjacent cupboards.
- The appliance can easily be installed in a fitted kitchen between wooden and plastic walls.

Waste-water connection

1. The required work sequence can be found in the installation instructions. If required, fit a siphon with an drainage connection.
2. Connect the waste-water hose to the drainage connection of the siphon with the enclosed parts.

   Ensure that the drainage hose is not kinked, crushed or twisted and that there is no cover plate in the drainage to prevent the waste water from flowing out!

Drinking water connection

1. Fasten the drinking water connection to the tap according to the installation instructions using the enclosed parts.

   Ensure that the drinking water connection is not kinked, crushed or twisted.
2. When replacing the appliance, always use a new water supply hose.

Water pressure:

At least 0.05 MPa (0.5 bar), maximum 1 MPa (10 bar). At a higher water pressure: connect pressure-reducing valve ahead.

Inlet rate:

Minimum 10 litres/minute

Water temperature:

Note printing on the water inlet hose!

If models are marked with 25°, the water temperature may be max. 25 °C (cold water).

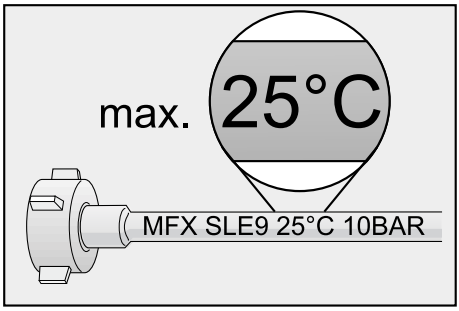

For all other models:

Cold water preferred; hot water max. temperature 60 °C.

Electrical connection

- Connect the appliance to an alternating current only, ranging from 220 V to 240 V and 50 Hz or 60 Hz via a correctly installed socket with protective earth conductor. See rating plate for required fusing 32.
- The socket must be near the appliance and freely accessible following installation.

  If the plug is not freely accessible, an allpole disconnector with a contact opening of at least 3 mm must be fitted on the installation side to satisfy the relevant safety instructions.
- The connection may be modified by technicians only.
- A power cord extension may be purchased from customer service only.
- Use only a residual current operated circuit-breaker which features the symbol ⊼. Only this extension guarantees compliance with the currently valid regulations.
- The appliance features a water damage protection system. Please note the system will not function **unless** the power supply is connected.

Removing the appliance

Also observe
the sequence of worksteps here.

1. Disconnect the appliance from the power supply.
2. Turn off the water supply.
3. Undo the waste water and drinking water connection.
4. Loosen fastening screws for the furniture parts.
5. If fitted, remove the base panel.
6. Pull out the appliance, carefully pulling the hose behind.

Transportation

Empty the dishwasher and secure loose parts.

Drain the appliance according to the following steps:

1. Turn on the tap.
2. Open the door.
3. Switch on ON/OFF switch [1].
4. Select programme [4] with the highest temperature button < [5].
5. Press START button [9].
6. Close the door.
   Programme sequence starts.
7. Open door after approx. 4 minutes.
8. Press START button [9] for approx. 3 sec.
   The Cleaning display [7] goes out.
9. Close the door.
   The remaining programme sequence lasts approx. 1 minute more. (Buzzer sounds.)
10. Switch off ON/OFF switch [1].
11. Turn off the tap, disconnect supply hose and drain water.

Transport appliance upright only.

(This prevents residual water from running into the machine control and damaging the programme sequence.)

Protection against frost

If the appliance is in a room where there is a risk of frost (e.g. holiday home), empty the appliance completely (see Transportation).

Subject to changes.

Childproof lock (door lock) *

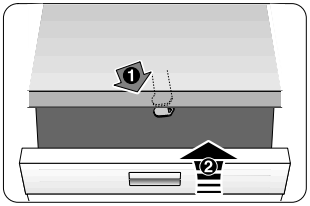

40

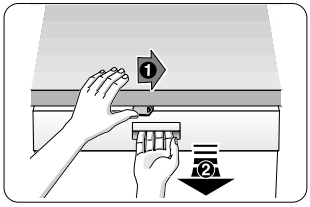

41

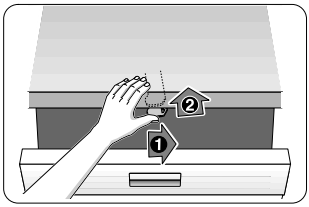

42

40 Activate the childproof lock.
41 Open the door with activated childproof lock.
42 Deactivate childproof lock.

⚠ Warning

Always close the appliance door completely when you leave the appliance.
This is the only way you can protect your children from potential dangers.

Baking sheet spray head *

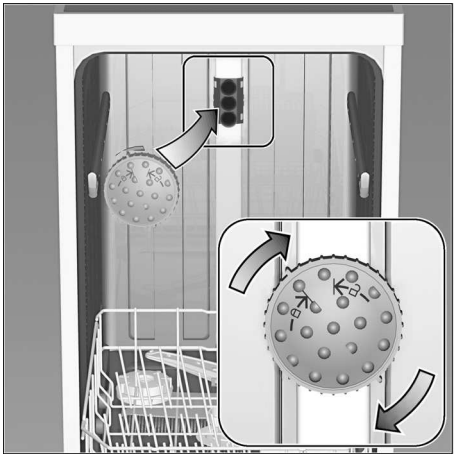

Large sheets or grilles and plates which have a diameter greater than 30 cm (gourmet plates, pasta plates, dinner plates) can be cleaned with the aid of the spray head.
To do this, remove the top basket and insert the spray head as illustrated in the diagram.

To ensure that the spray jet can reach all parts, arrange the baking sheets as illustrated (max. 4 baking sheets and 2 grilles).

Never operate the dishwasher without the top basket or baking sheet spray head!

* some models

AquaStop guarantee (does not apply to appliances without AquaStop)

In addition to warranty claims against the seller based on the purchase contract and in addition to our appliance warranty we will pay damages under the following conditions:

1. If our AquaStop system is defective and causes water damage, we will make good the damage for private users.
   To ensure water damage protection, the appliance must be connected to the power supply.
2. This liability guarantee is valid for the service life of the appliance.
3. A prerequisite for the warranty claim is that the appliance has been correctly installed and connected with AquaStop according to our instructions.
   This also includes the correct installation of the AquaStop extension (original accessory). Our warranty does not extend to defective feed lines or fittings up to the AquaStop connection on the tap.
4. If your appliance is fitted with AquaStop, you can leave your appliance unattended during operation and leave the tap turned on afterwards.
   The tap should only be turned off if you are absent from home for a prolonged period, e.g. several weeks holiday.

☎ Repair order and advice on faults.

GB	0844 892 8979	Calls from a BT landline will be charged at up to 3 pence per minute. A call set-up fee of up to 6 pence may apply.
IE	01450 2655	0.03 € per minute at peak. Off peak 0.0088 € per minute.
US	800 944 2904	toll-free

Contact information for all countries can be found on the enclosed customer service list.

Robert Bosch Hausgeräte GmbH
Carl-Wery-Straße 34
81739 München
Germany
www.bosch-home.com

9000889353 en (9407) 640EV